Valor Portrait

531 President FS—Dimensions & Clearances

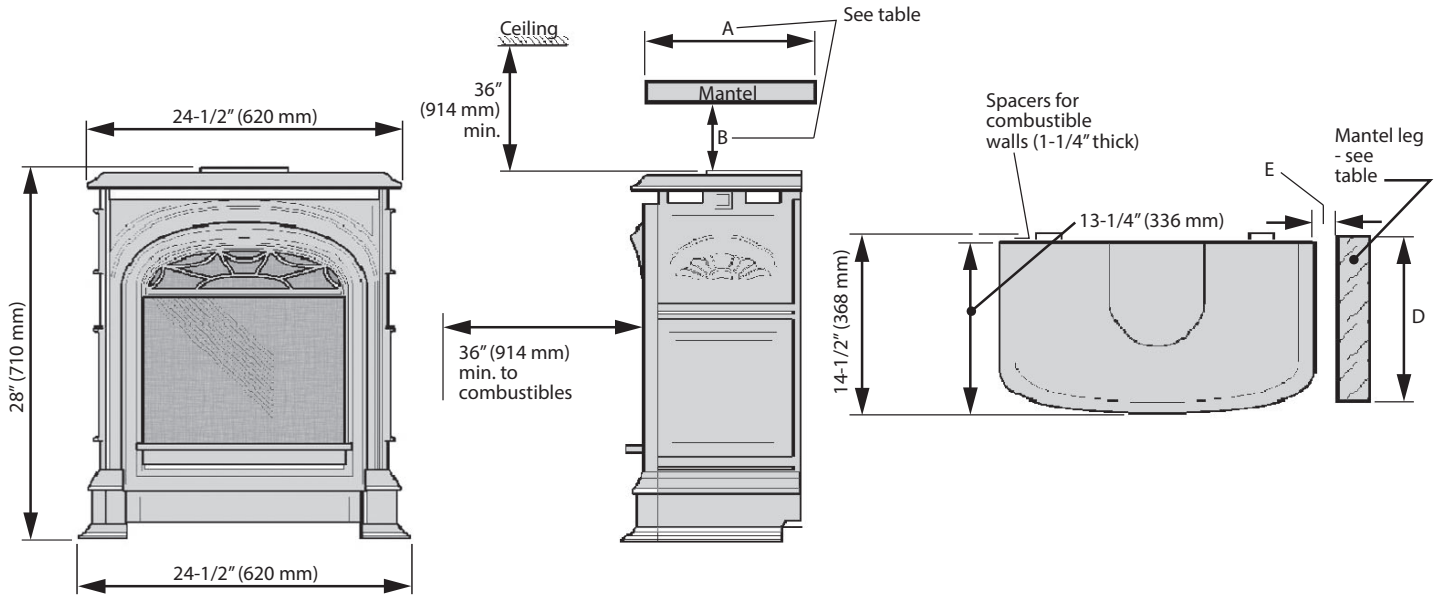

Mantel Depth "A"	Min. Clearance "B"
Up to 7"	4"
Above 7" up to 8"	5"
Above 8" up to 9"	7"
Above 9" up to 10"	8"
Above 10" up to 12"	9"
More than 12"	9" +extra 1" for every 1" depth above 12"

Mantel Leg Projection "D"	Min. Clearance from Appliance Side "E"
Up to 8"	0"
More than 8"	6"

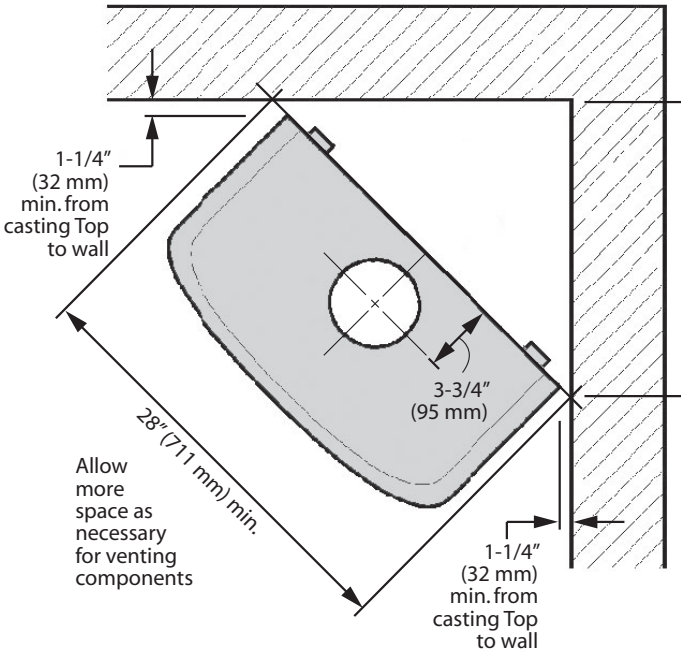

Valor Fireplaces • 190—2255 Dollarton Highway • North Vancouver, BC • V7H 3B1
Tel: 604.984.3496 or 1.800.468.2567 • Fax: 604.984.0246 or 1.800.268.0333 www.valorfireplaces.com

Valor Portrait
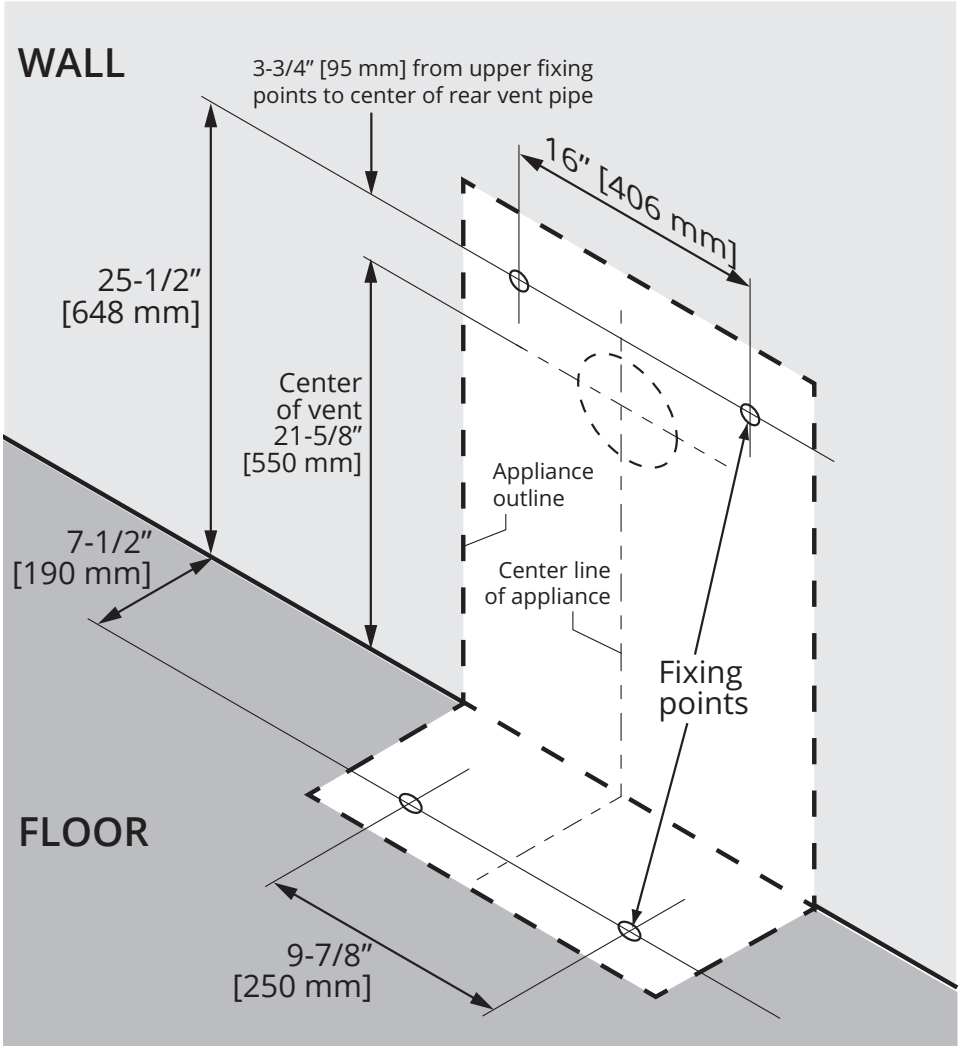
531 President FS—Framing