L1 1500K

Concept

Note: This appliance may be installed in outdoor, weather protected environments as defined in the GV60CKO Outdoor Conversion Kit instruction manual.

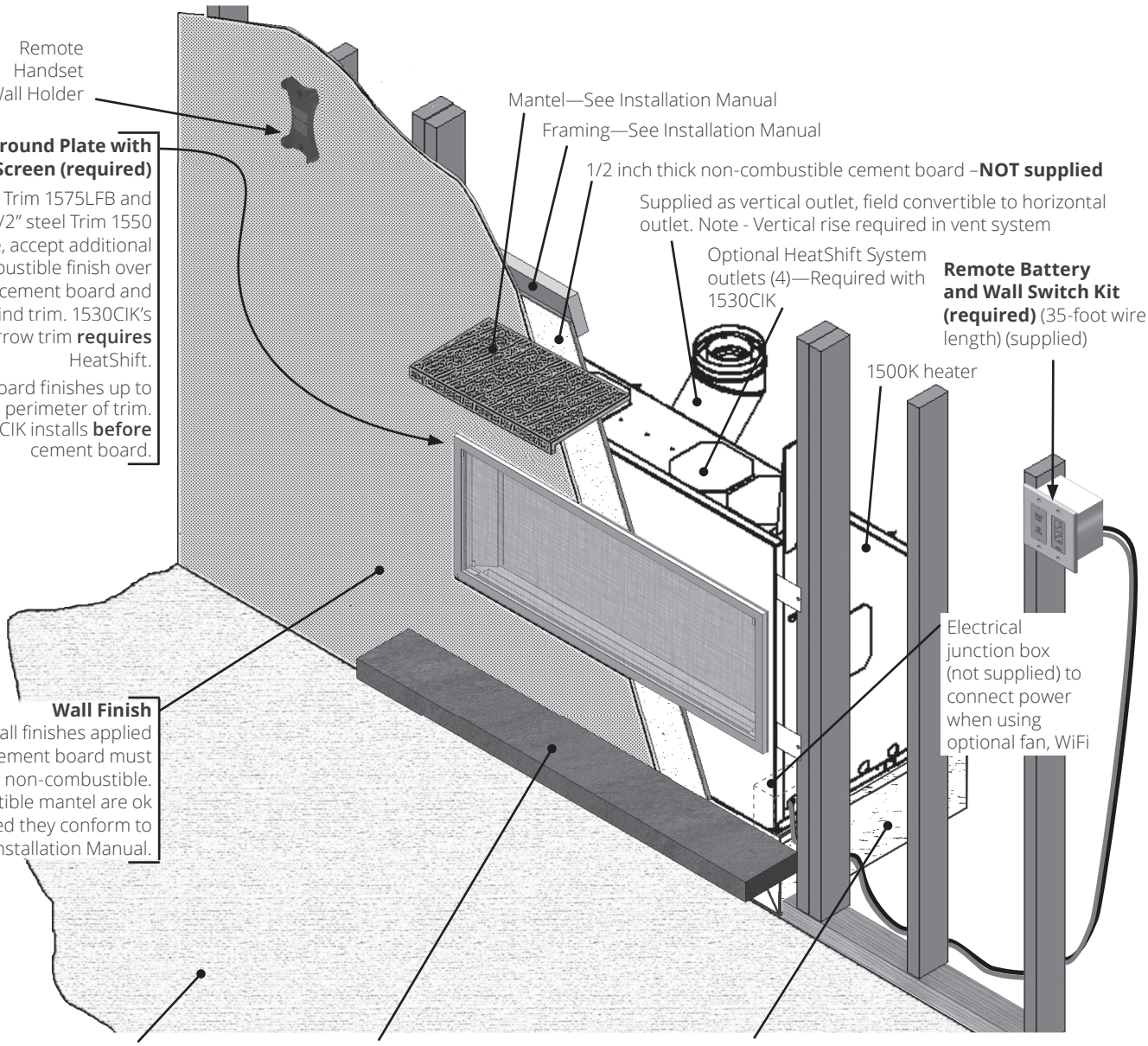

Surround Plate with Barrier Screen (required)

Narrow 1" Trim 1575LFB and wider 3-1/2" steel Trim 1550 adjustable, accept additional non-combustible finish over cement board and behind trim. 1530CIK's narrow trim **requires** HeatShift.

Cement board finishes up to perimeter of trim. Note: 1530CIK installs **before** cement board.

Wall Finish

Any wall finishes applied over cement board must be non-combustible. Combustible mantel are ok provided they conform to Installation Manual.

Combustible Floor

Hearth: not required. If used, **must be** minimum 4" below fireplace opening unless using LDK HeatShift Duct Kit (see installation instructions packed with kits).

Combustible Framing Allowed Beneath Fireplace. When the appliance is installed directly on carpeting, tile or other combustible material other than wood flooring, the appliance shall be installed on a metal or wood panel extending the full width and recessed depth of the appliance.

L1 1500K

Dimensions

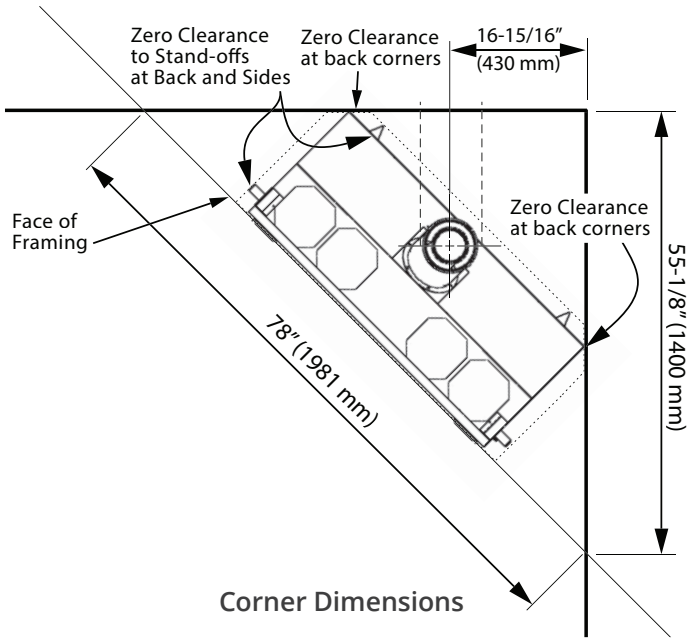

Corner Dimensions

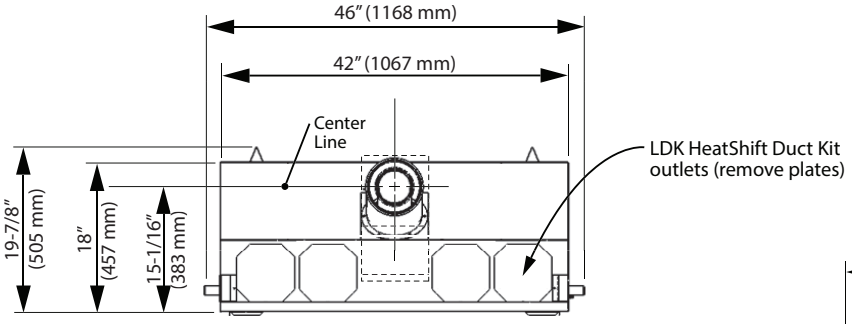

Top View

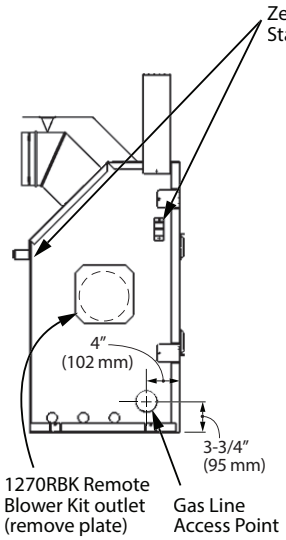

Left Side View

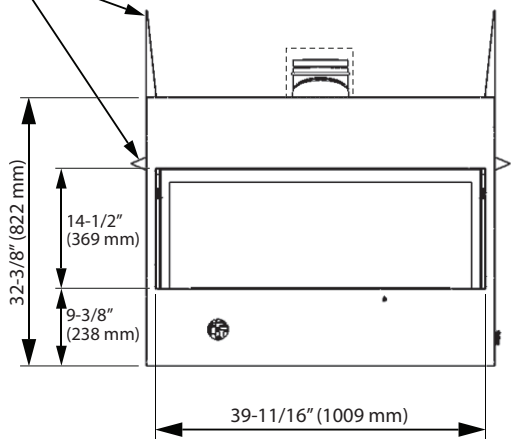

Front View

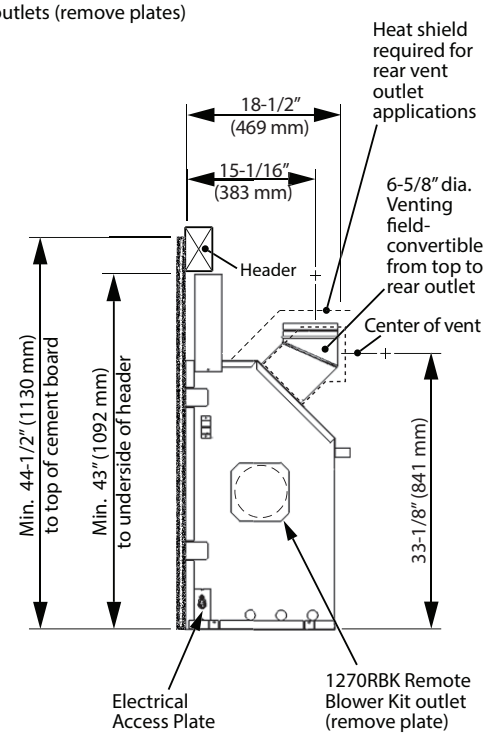

Right Side View